BACCARA®
AUTOMATION & CONTROL

# AVA/AVF Vacuum Switch

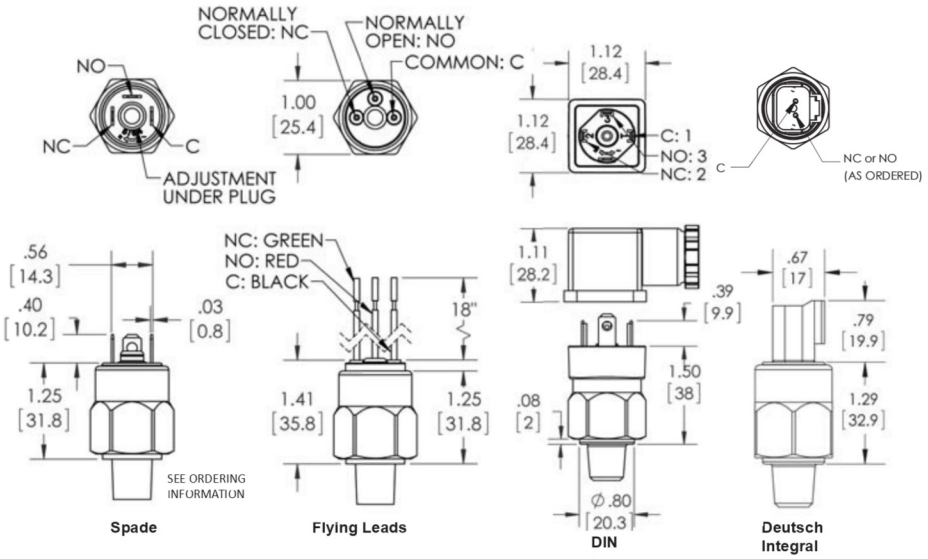


| Model | Adjustment Range in Hg | Adjustment Range MilliBar | Avg. Differential in Hg | Avg. Differential MilliBar | Repeatability |
|---|---|---|---|---|---|
| 1 | 5 - 28 | 170 - 950 | 4 - 6 | 135 - 200 | ± 2" Hg (68mbar) + 2% of setting |

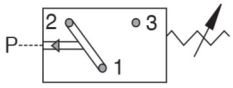


## ELECTRICAL:
Standard: 5A, 125V/250VAC - U.L. Recognized*
5A, 12/24VDC - U.L. Recognized*
Option -7: 0.02A, 60VDC - U.L. Recognized*
Gold contacts may be required for less than 12 VDC and 20 milliamps

## MANUFACTURER'S OTHER RATING:
5A @ 40VDC

## WETTED MATERIAL:
Diaphragm: Buna-N (standard)
(optional EPDM, KAPTON®,VITON®)
Housing: Brass
(optional 316 Stainless Steel)

## PROTECTION:
Exposed Terminals – IP00
DIN HC - IP65
Flying Leads, M12, Deutsch Integral - IP69

## SWITCH TYPE:
Snap Action

## MECHANICAL LIFE:
1,000,000 cycles

## MEDIA TEMPERATURE RANGE:
Buna – N: -15° to +230°F (-26° to 110°C)
EPDM: -10° to +250°F (-23° to 121°C)
KAPTON®: -40° to +239°F (-40° to 115°C)
VITON®: 0° to +302°F (-18° to 150°C)
(® Registered Trademark of DuPont)

## MAXIMUM OVERPRESSURE:
350 PSI (24 Bar)

## WEIGHT:
0.08 lbs (0.04 kg)

## *ORDERING INFORMATION*

| *AVA* | *- * 1* | *- * R* | *- 4M* | *- A* | *- FL* | *- * 1* |
|---|---|---|---|---|---|---|
| **Model** | **Set Point** | **Direction** | **Port Size** | **Circuit** | **Terminal** | **Options** |
| AVA - Field Adjustable<br><br>AVF - Factory Set | See Above Adjustment Ranges<br><br>*Model AVF Specify Set Point Required | R - Rising<br>F - Falling<br>MBR - Millibar Rising<br>MBF - Millibar Falling<br><br>*Omit For Model AVA | 2M - 1/8 NPT<br>4M - 1/4 NPT<br>2G - 1/8 BSPP<br>4G - 1/4 BSPP (undercut for an o-ring seal)<br>4S - 7/16X20 SAE MALE<br>4SW - 7/16X20 SAE Swivel<br>6S - 9/16X18 SAE MALE<br>M10 - M10X1<br>M12 - M12X1.5<br><br>Consult Factory for Non-Standard | A - SPST / NO<br>B - SPST / NC<br>C - SPDT | SP - 1/4" x 1/32" Spade<br>TS - 6-32 Terminal Screws<br>FL - 18" Flying Leads<br>FLL - Advise additional length of leads if required<br>H - DIN 43650A Male Half Only<br>HC - DIN 43650A Cable Clamp<br>HN - DIN 43650A 1/2 Conduit (female)<br>HCC - XXX (Specify Length in Inches)<br>DI - Deutsch Integral<br>M12 - M12 X 1<br>PP - Packard Plug<br><br>* For other Electrical Terminations refer to page 49 | * - Omit If Standard<br>1 - VITON® Diaphragm<br>2 - EPDM Diaphragm<br>2W - EPDM Diaphragm (WRAS)<br>3 - KAPTON® Diaphragm<br>4 - 316 SS Housing<br>5 - Spiral Restrictor<br>6 - Oxygen Cleaned<br>7 - Gold Contacts<br>UL - UL Recognized**<br>**For Selected Models Only - Consult Factory<br>12 - WRAS Approved<br><br>**** Call Factory for Shrink Wrap Options & Pricing |